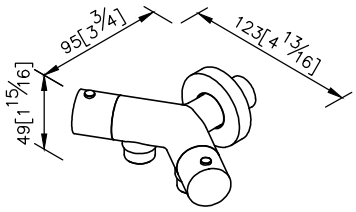
95[3/4]
123[4 13/16]
49[1 15/16]

unit: mm[inch]

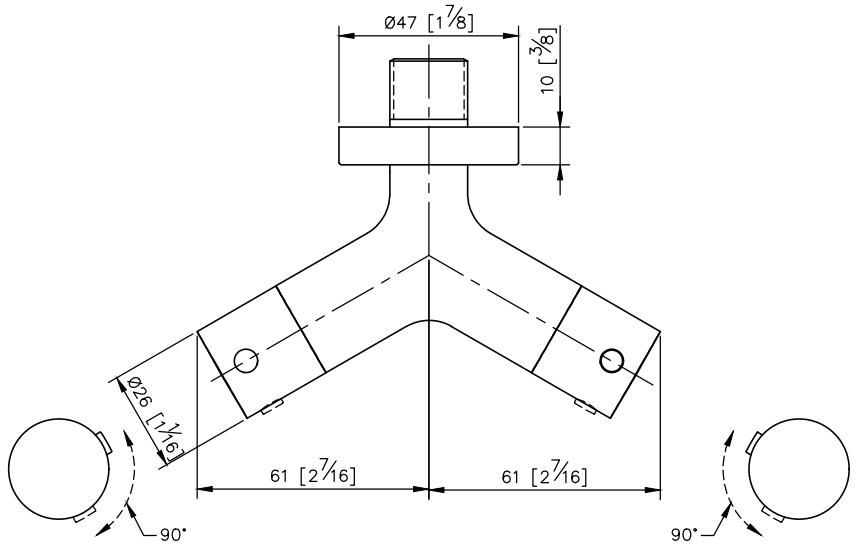
Ø47 [1 7/8]
10 [3/8]
Ø26 [1 1/16]
61 [2 7/16]
61 [2 7/16]
90°
90°

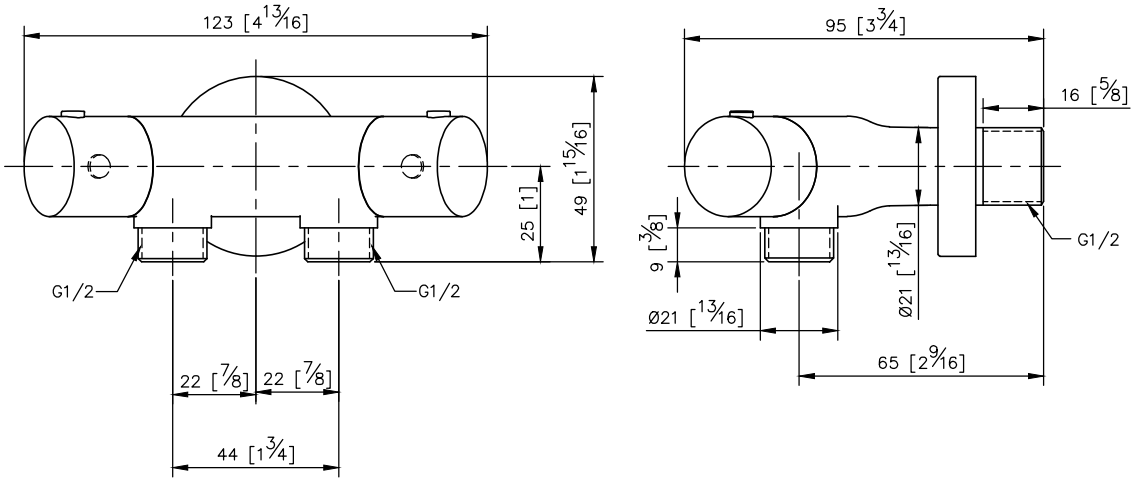
123 [4 13/16]
49 [1 15/16]
25 [1]
G1/2
G1/2
22 [7/8]
22 [7/8]
44 [1 3/4]
95 [3 3/4]
16 [5/8]
9 [3/8]
Ø21 [13/16]
Ø21 [13/16]
G1/2
65 [2 9/16]